REVISION HISTORY			
REV	DESCRIPTION	DATE	APPROVED

WAVE

Elementy kulowe transportowe

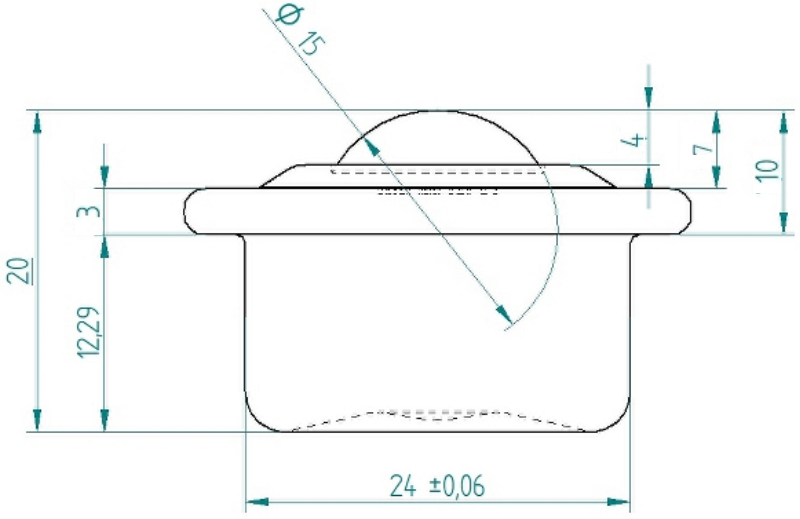

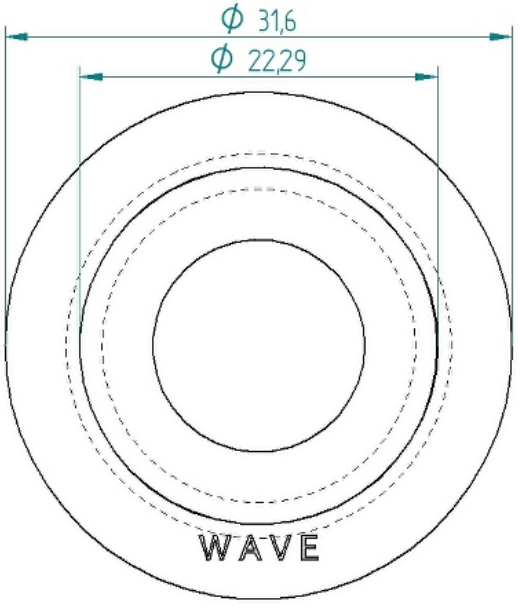

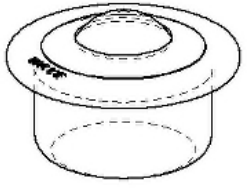

	NAME	DATE
DRAWN	Michal A.	09/08/20
CHECKED		
ENG APPR		
MGR APPR		

UNLESS OTHERWISE SPECIFIED
DIMENSIONS ARE IN MILLIMETERS
ANGLES ±X.X°
2 PL ±X.XX 3 PL ±X.XXX

Solid Edge

TITLE: Kula transportowa KU- 15 IP

SIZE A2 | DWG NO KU-15 IP | REV 1

FILE NAME KU-15 IP

SCALE | WEIGHT | SHEET 1 OF 1